87045 Limoges Cedex
Telephone: (+33) 05 55 06 87 87 - Fax:(+33) 05 55 06 88 88

Galion™
20A DP switches

Cat. No(s): 2 824 08/08m/09/09m/12/12m/14
K8/31D20AN-HK K8/32D20AN-HK

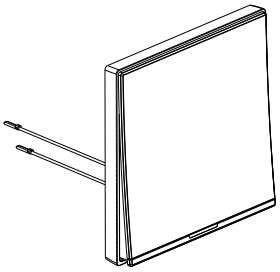

2 824 08/08m/14
K8/31D20AN-HK

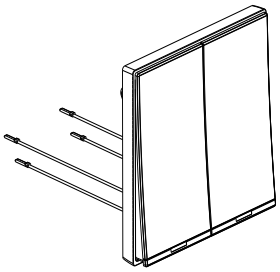

2 824 09/09m
K8/32D20AN-HK

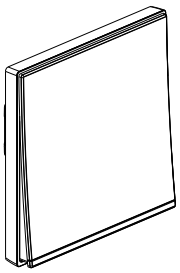

2 824 12/12m

CONTENTS

1. Use.....1
2. Range.....1
3. Preparation.....1
4. Overall dimensions.....1/2
5. Connection.....2
6. Operation.....2
7. Technical characteristics.....2
8. Cleaning.....2
9. Conformity - Approvals.....2

1. USE

General lighting control mechanisms.
(Supplied with M3.5 screws for BS boxes. Flush mounting or Surface mounting.)

2. RANGE

	Designation	Cat. No.	Weight (g)	Characteristics
	1 gang 1 way 20 A DP switch with LED indicator	2 824 08/08m 2 824 14	84.4	20 A - 250VAC
	1 gang 1 way 20 A DP switch with LED indicator	K8/31D20AN -HK	84.4	20 A - 250VAC
	2 gang 1 way 20 A DP switch with LED indicator	2 824 09/09m	104	20 A - 250VAC
	2 gang 1 way 20 A DP switch with LED indicator	K8/32D20AN -HK	104	20 A - 250VAC
	1 gang 2 way 20 A DP switch	2 824 12/12m	98.2	20 A - 250VAC

Colours
- front: white/rose golden/champagne/dark silver
- rear: white/rose golden/champagne/dark silver

X XXX XX white
X XXX XX-C matt black
X XXX XX-C1 rose golden
X XXX XX-C2 champagne
X XXX XX-C3 dark silver

3. PREPARATION

3.1 General preparation

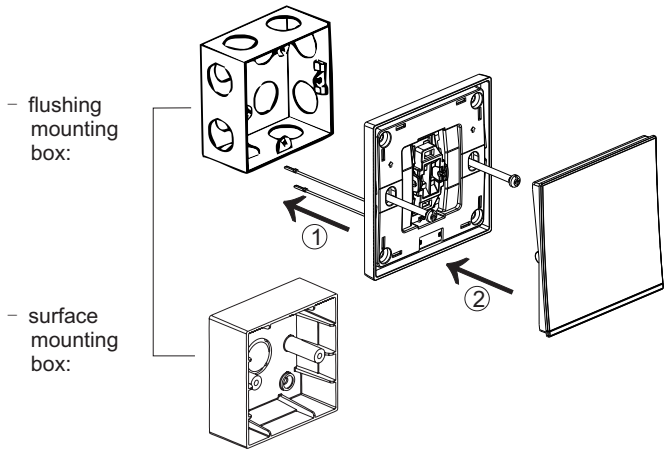

4. OVERALL DIMENSIONS

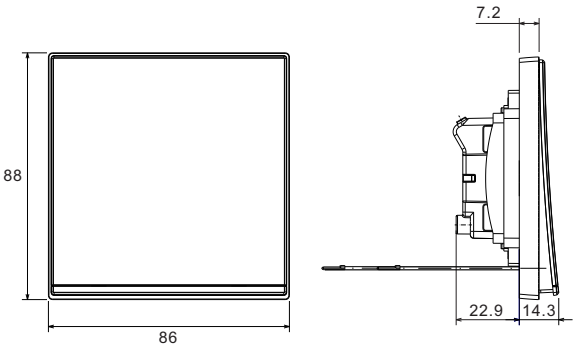

Profile Size: 86×88 mm
Distance of installation hole: 60.3 mm
Minimum depth of the box>35 mm

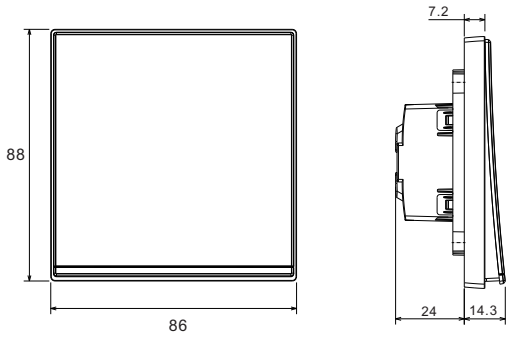

Profile Size: 86×88 mm
Distance of installation hole: 60.3 mm
Minimum depth of the box>35 mm

5. CONNECTION

5.1 Terminals
Terminal capacity: 3 ×1 mm²
3 ×1.5 mm²
2 ×2.5 mm²
1 ×4 mm²
Recommended screwdriver size: 4 mm flat blade
Recommended stripping length: 12 mm
Recommended terminal tightening torque: 0.5Nm

5.2 Circuit diagrams

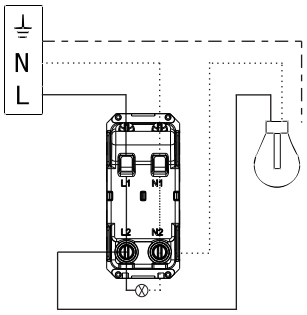

1W switch

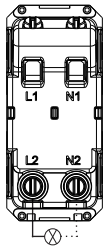

1W switch LED indicator light

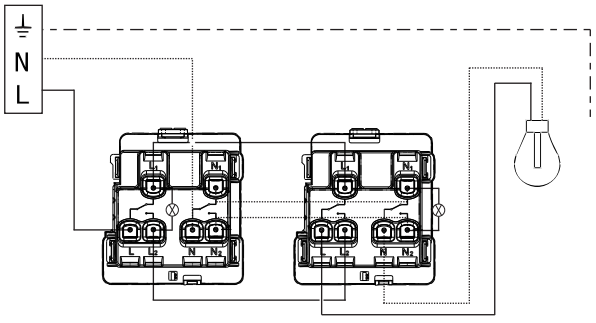

2W switch

6. OPERATION

Switch mechanism (handling force: 0.9 to 1.6N)

7. TECHNICAL CHARACTERISTICS

7.1 Material characteristics
Rocker: Polycarbonate
Bar: Polycarbonate
Frame: Polycarbonate
Base: Polyamide
Self-extinguishing:
+ 850° C / 30 s for insulating parts holding live parts in place
+ 650° C / 30 s for other parts made of insulating materials

7.2 Electrical characteristics
Voltage: 250VAC
Current: 20A

7.3 Climatic characteristics
Storage temperatures: -10℃ to +70℃
Operating temperatures: -5℃ to +50℃

7.4 Mechanical characteristics
Impact test: IK04
Protection against liquids: IP20

8. CLEANING

Surface cleaning with a soft, slightly damp cloth.
Do not use: acetone, tar remover, trichloroethylene

9. CONFORMITY - APPROVALS

Conform to BS EN 60669-1; MS/IEC 60669-1